The University Of Sheffield.

Inductively coupled plasma (ICP) spectroscopy for online measurements of trace metal emissions at the 250 kW PACT furnace

Presented by:
Dr Janos Szuhanszki

Karen Finney, Janos Szuhanszki, Bill Nimmo, Mohamed Pourkashanian and Rachael Hall (GE)

The Coal Research Forum 27th Annual Meeting, 20th April 2016, Imperial College London

THE 1ST STUDENT EXPERIENCE SURVEY 2014-15

Contents

- UKCCSRC PACT Facilities
- ICP mobile laboratory
- Example project
- Experimental trials

250 kW combustion test facility (CTF) layout

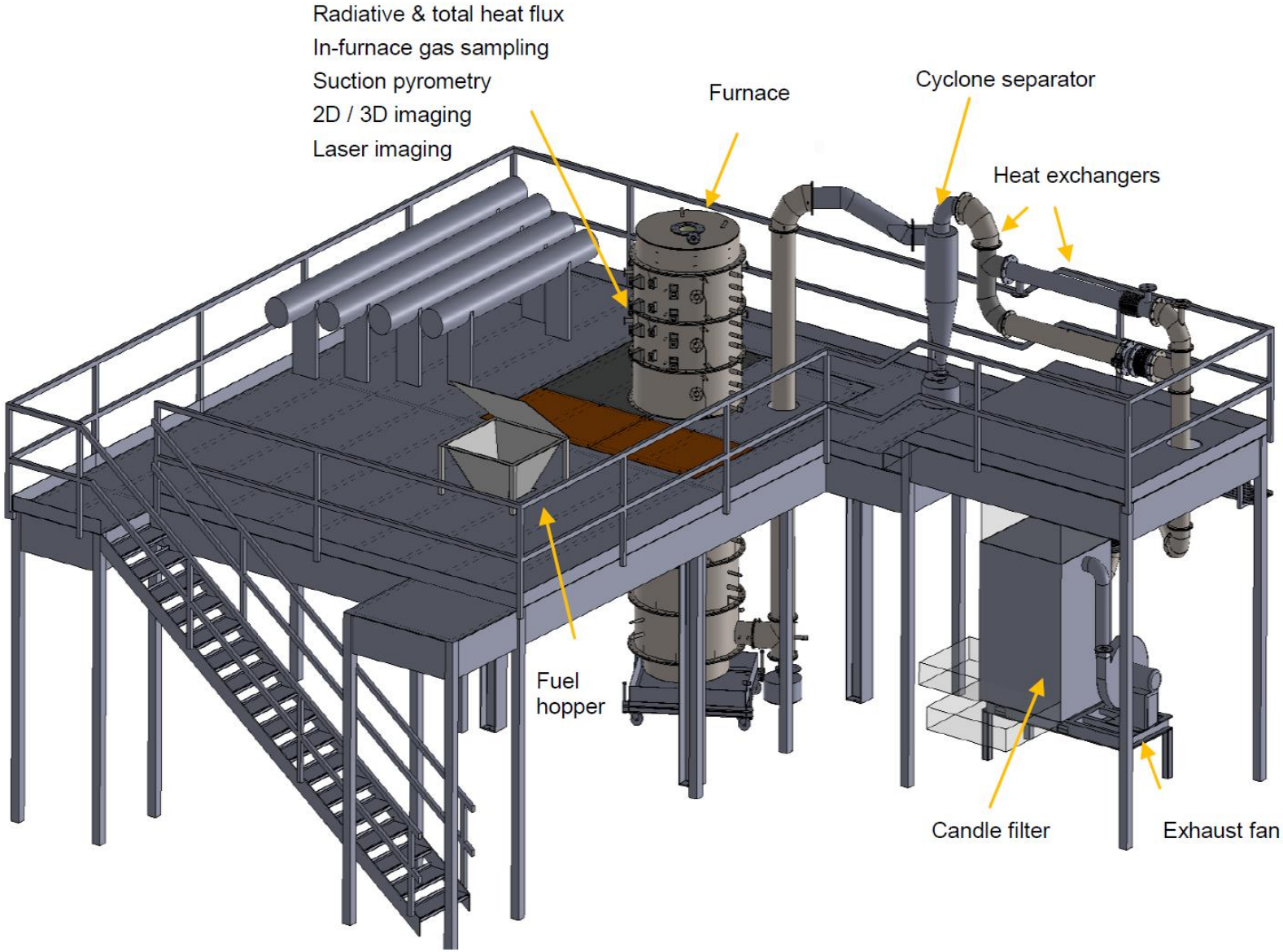

Oxidiser feed system

Oxy-fuel supply skid

Electrical preheaters

Air supply skid

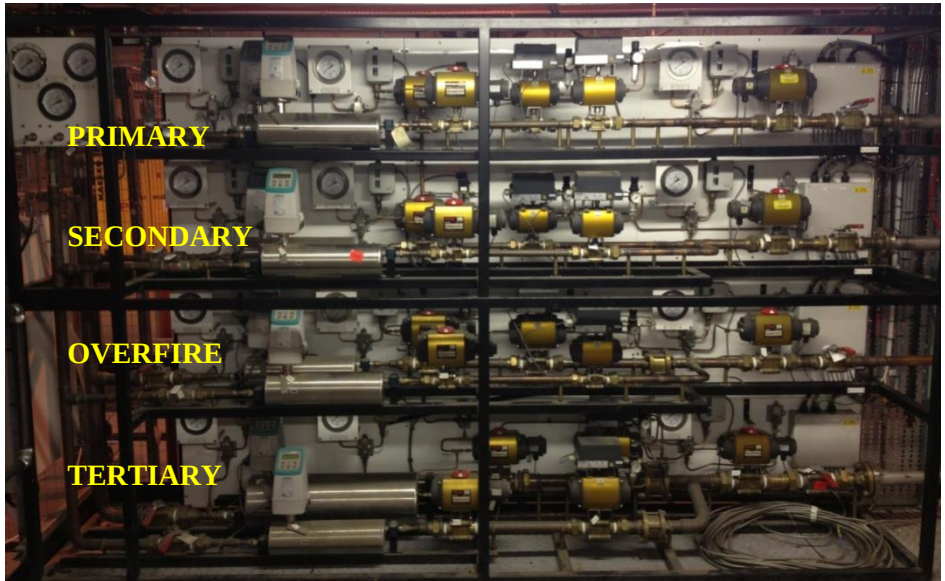

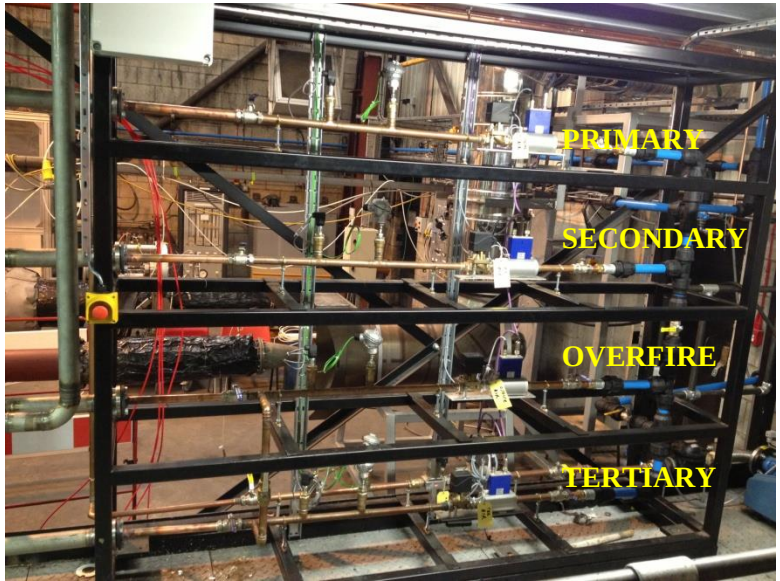

Fuel capabilities

- 100% coal firing
- 100% biomass firing

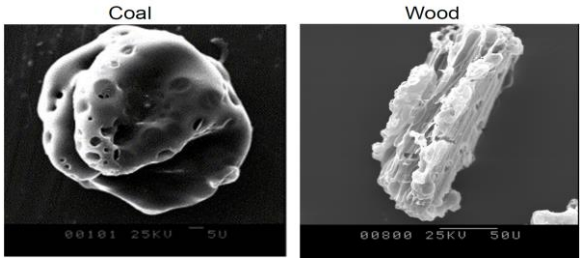

Williams, A. Dr J. M. Jones, Professor M. Pourkashanian. 2007. *Co-firing Coal/Biomass and the Estimation of Burnout and NO_x Formation*. BCURA Agreement Number B 79.

Coal and biomass feeders

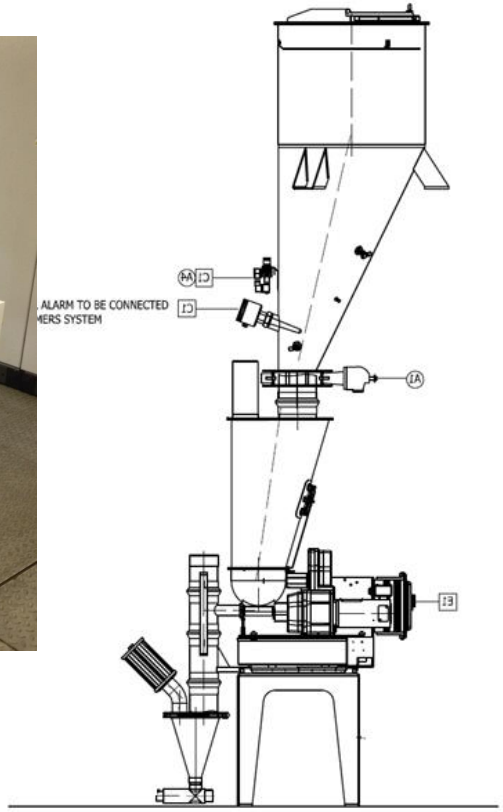

Fuel types selected for current trials:

- El Cerrejon high volatile bituminous coal
- Biomasses used by power generators
  - milled wood
  - torrefied biomass

Jones JM, Williams A, Waldron DJ. An investigation of the grindability of two torrefied energy crops. *Fuel* (89); 3911–18

Furnace capabilities

In-flame gas temperatures

In-flame gas composition (O_2, CO_2, CO, NO, SO_2)

Heat flux

2D and 3D imaging

Laser imaging

Ash sampling

Deposition studies

Flue gas emissions

Furnace

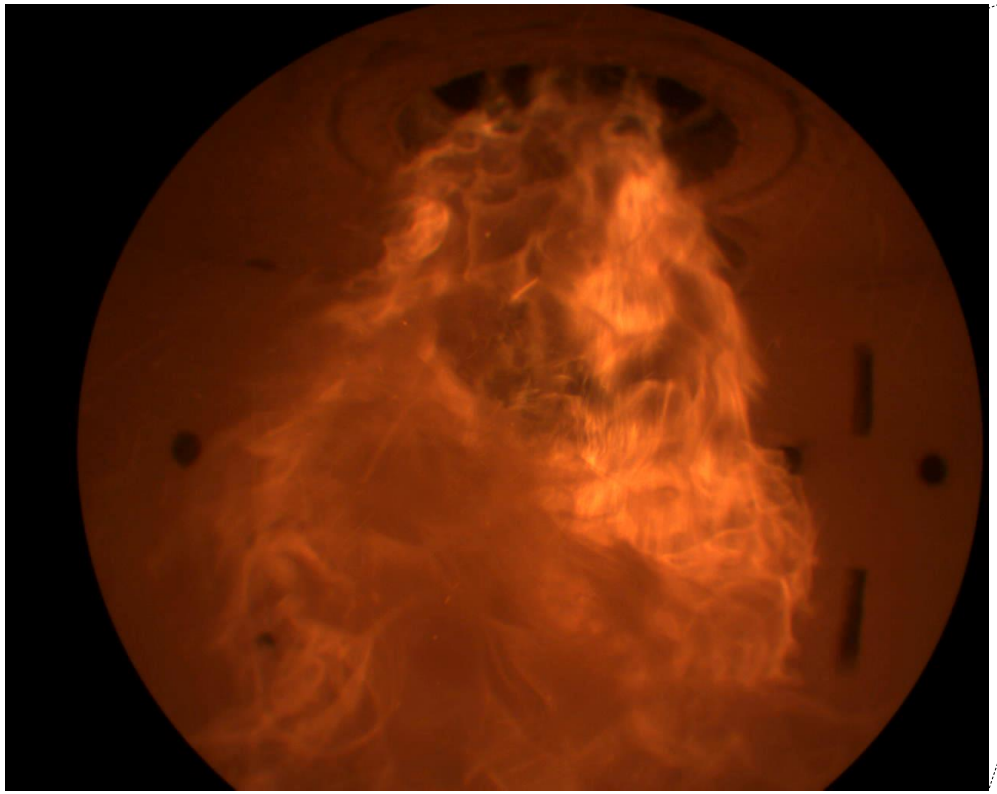

A typical 200 kW coal flame (El Cerrejon Columbian coal)

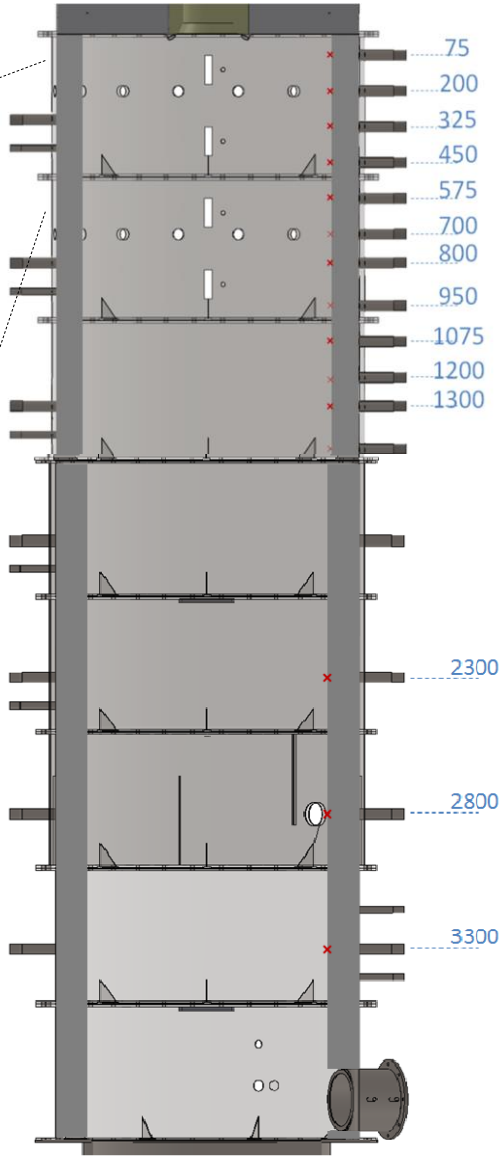

Furnace cross section view

ICP-OES

- The Continuous Emissions Monitoring Laboratory is a self-contained mini mobile laboratory
- It houses a Spectro Ciros^{CCD} ICP-OES: an **i**nductively **c**oupled **p**lasma – **o**ptical **e**missions **s**pectrometer
- Emissions spectra of non-volatile/volatile elements:
  - ~ over 30 elements – Pb, Na, Zn, B, Al, Br, Ca, Cr, Sc, Cd, Fe, I, K, Li, Co, Cu, Ti, P, Si, Sn, Mg, Ni, Mn, Ag, Tl, S, V, Sb and Hg
- Our tests will focus on elements that:
  - ~ cause operational issues (slagging, fouling, corrosion) **K and Na**
  - ~ are easily vaporised **Hg, Cd, Pb**
  - ~ are toxic (heavy metals) **Hg, V, Cr, Cd and Pb**

Mobile facility construction

Sample system configuration

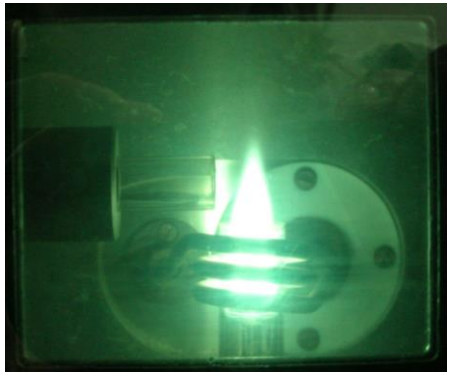

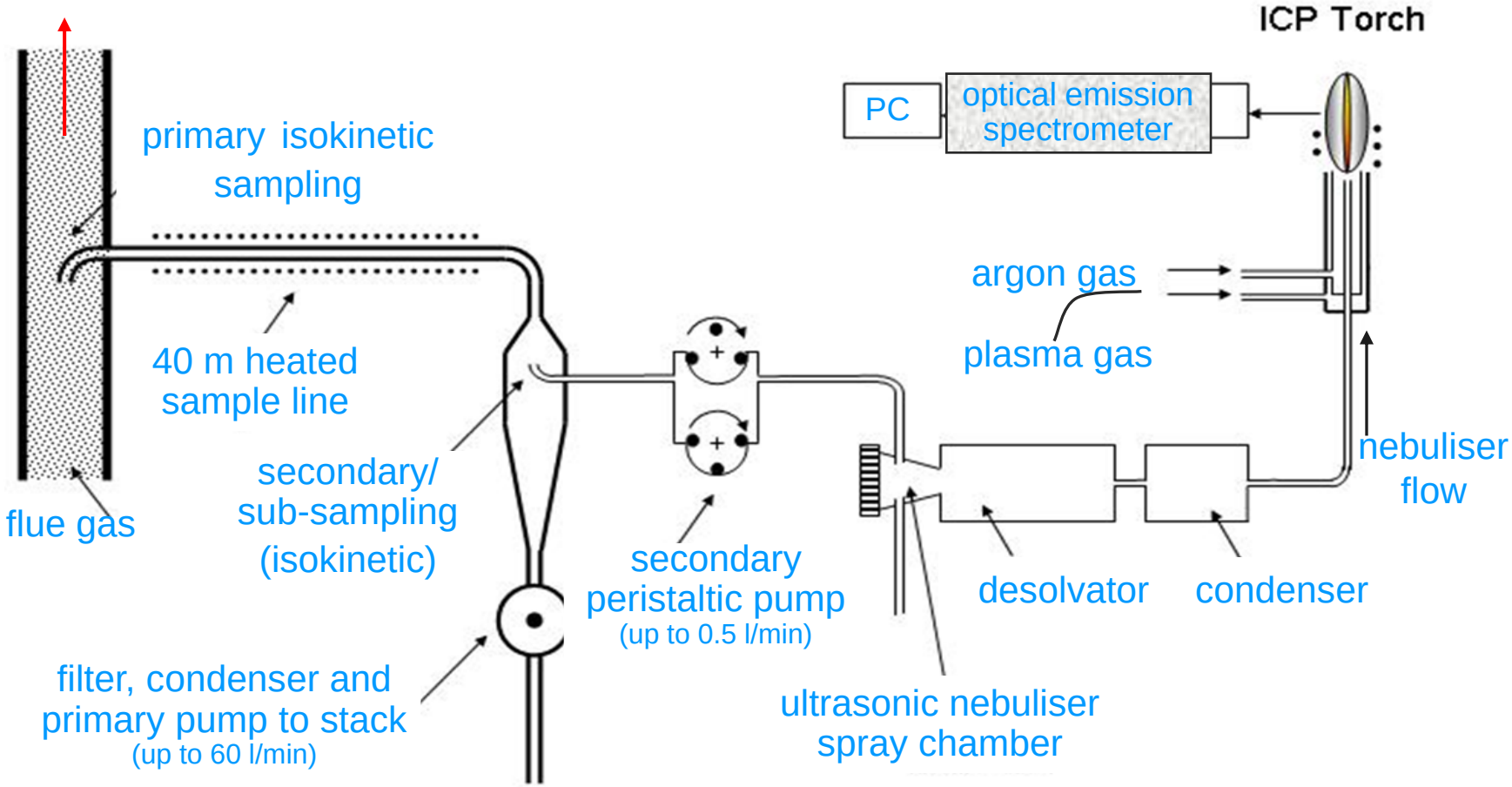

ICP torch

- Custom-built, radial, demountable plasma torch
- Argon plasma heated to 6000K
- The plasma torch excites the sample to higher energy states. On relaxation, from these excited states, causes a release of photons. These photons have specific wavelengths directly corresponding to the transition in energy level, and it is this fingerprint wavelength that is used to identify the specific species present in the sample.

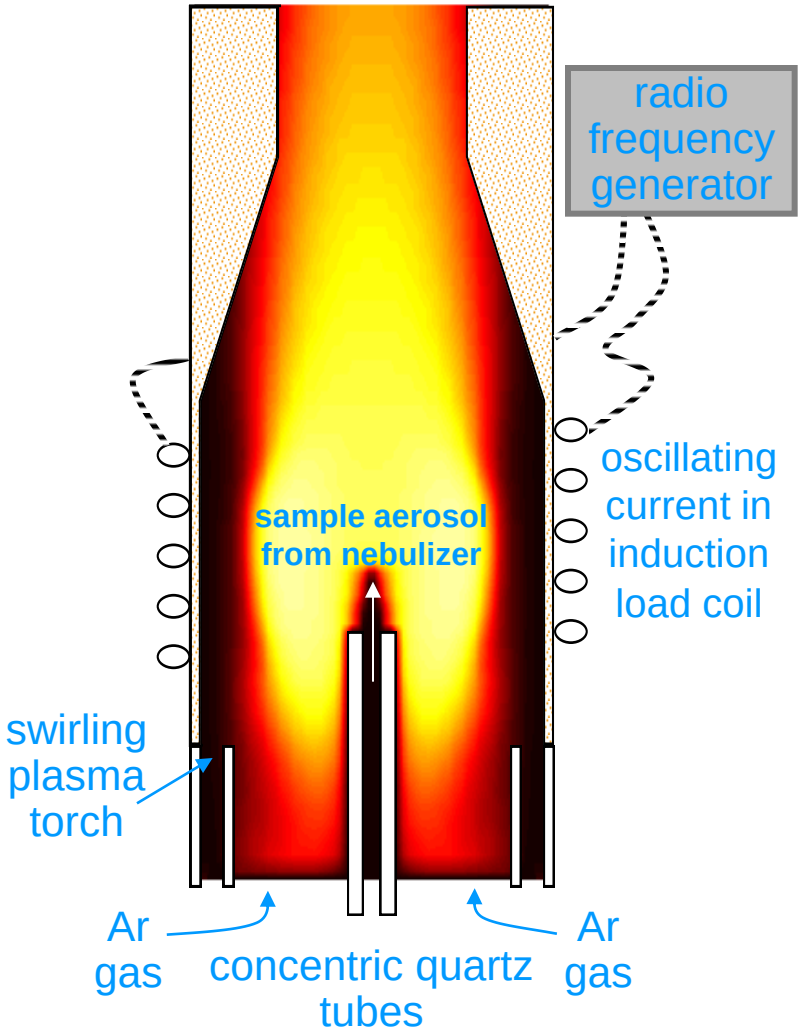

Waste-to-Energy plants
ICP testing at UK plants

- Schematic of a typical municipal solid waste (MSW) mass-burn incinerator process at an energy-from-waste plant

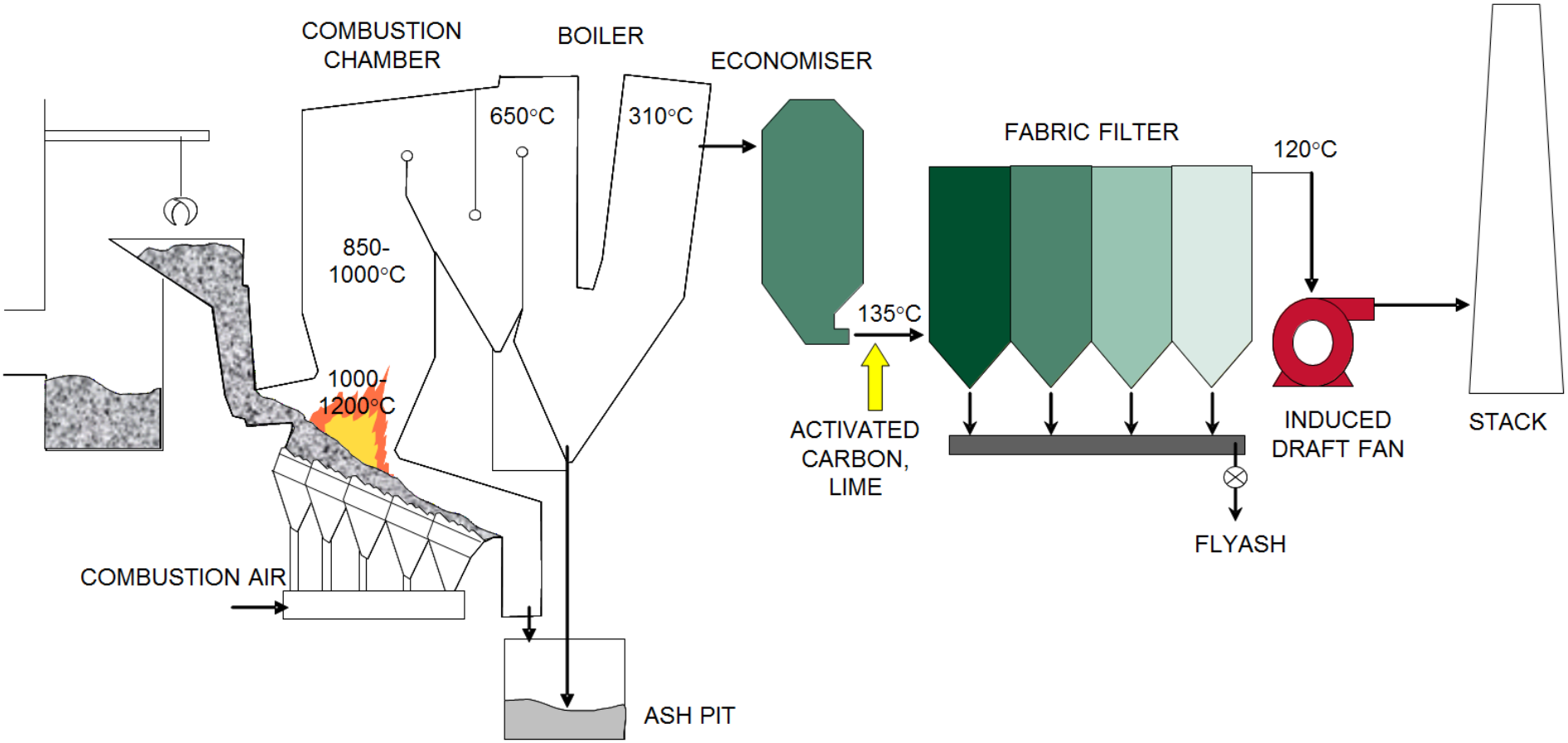

Waste-to-Energy plants
ICP testing at UK plants

- Isokinetic sampling from the flue gas stack
- Data averaged over a 24 hr sampling period
- Continuous measurements are shown for Hg
  - spikes show the injection of an analytical quality standard for checking the calibration accuracy
  - compare to 'background' levels of these

Metal	Limit (2000/76/EC) (mg m^{-3})	Extractive Test 1 (mg m^{-3})	Extractive Test 2 (mg m^{-3})
Hg	0.05	0.00014	0.00016
Cd			
Tl			
Σ Cd + Tl	0.05	0.00047	0.00026
Sb		<0.00073	0.0041
As		<0.00073	<0.00074
Pb		0.0015	0.00074
Cr		0.0018	0.0048
Co		<0.00022	<0.00022
Cu		0.0058	0.00074
Mn		0.080	0.0020
Ni		0.0061	0.021
V		<0.00022	<0.00022
Σ Metals	0.5	0.096	0.034

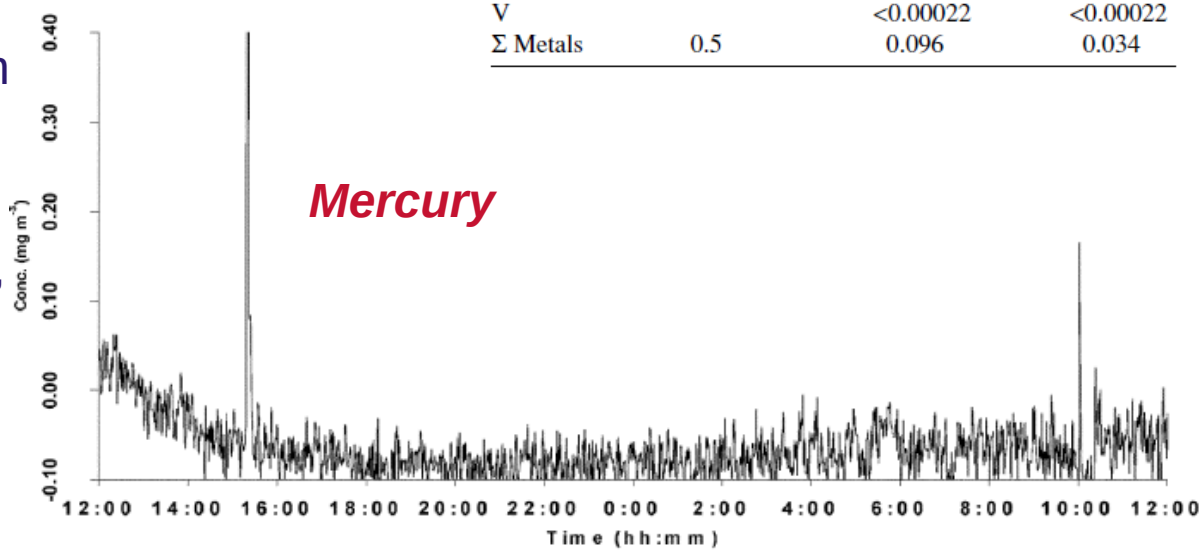

Clarkson, *et al*. (2003) Anal Bioanal Chem 377, 39-47; Clarkson, *et al*. (2004) J Anal At Spectrom 19, 652-653; Poole, *et al*. (2005) J Anal At Spectrom 20, 932-938

Current fuel tests at PACT

- El Cerrejon coal
- North American biomass
  (white wood pellets shown as WWP)
- recycled wood

Wt% (AR)	PACT WWP	PACT El Cerrejon
Moisture	6.69	5.07
Volatiles	78.10	35.46
Fixed Carbon	14.51	55.07
Ash	0.70	4.40
N	0.15	1.32
C	48.44	69.44
H	6.34	4.55
S	<0.02	0.07
Cl	<0.01	0.03
O	37.69	15.15
GCV (kJ/kg)	19.41	28.70
NCV (kJ/kg)	18.10	27.68

Comparison of results will be made under both air- and oxy-firing conditions

	PACT WWP	PACT El Cerrejon
Elemental Oxide (%)		
SiO_2	13.6	39.9
Al_2O_3	1.9	16.6
Fe_2O_3	1.3	10.8
TiO_2	0.1	0.6
CaO	27	14.4
MgO	5.5	1.9
Na_2O	1.3	1.9
K_2O	10.1	1.6
Mn_3O_4	2.2	0.1
P_2O_5	3.1	0.8
SO_3	2.4	11.4
Trace Metals mg/kg		
Arsenic	0.3	2.4
Cadmium	0.1	<0.1
Chromium	2.2	4.7
Copper	2.6	11.7
Nickel	0.7	3.6
Mercury	<0.1	<0.1
Lead	0.7	3.8
Vanadium	<0.6	5.1
Zinc	10.2	14.9

Fuel characterisation data is courtesy of the university project partner: The University of Leeds – L. Darvell, B. Dooley, J.M. Jones, A Williams

Current fuel tests at PACT

Options for sampling:

1. Furnace outlet
2. Cyclone outlet
3. Candle filter outlet

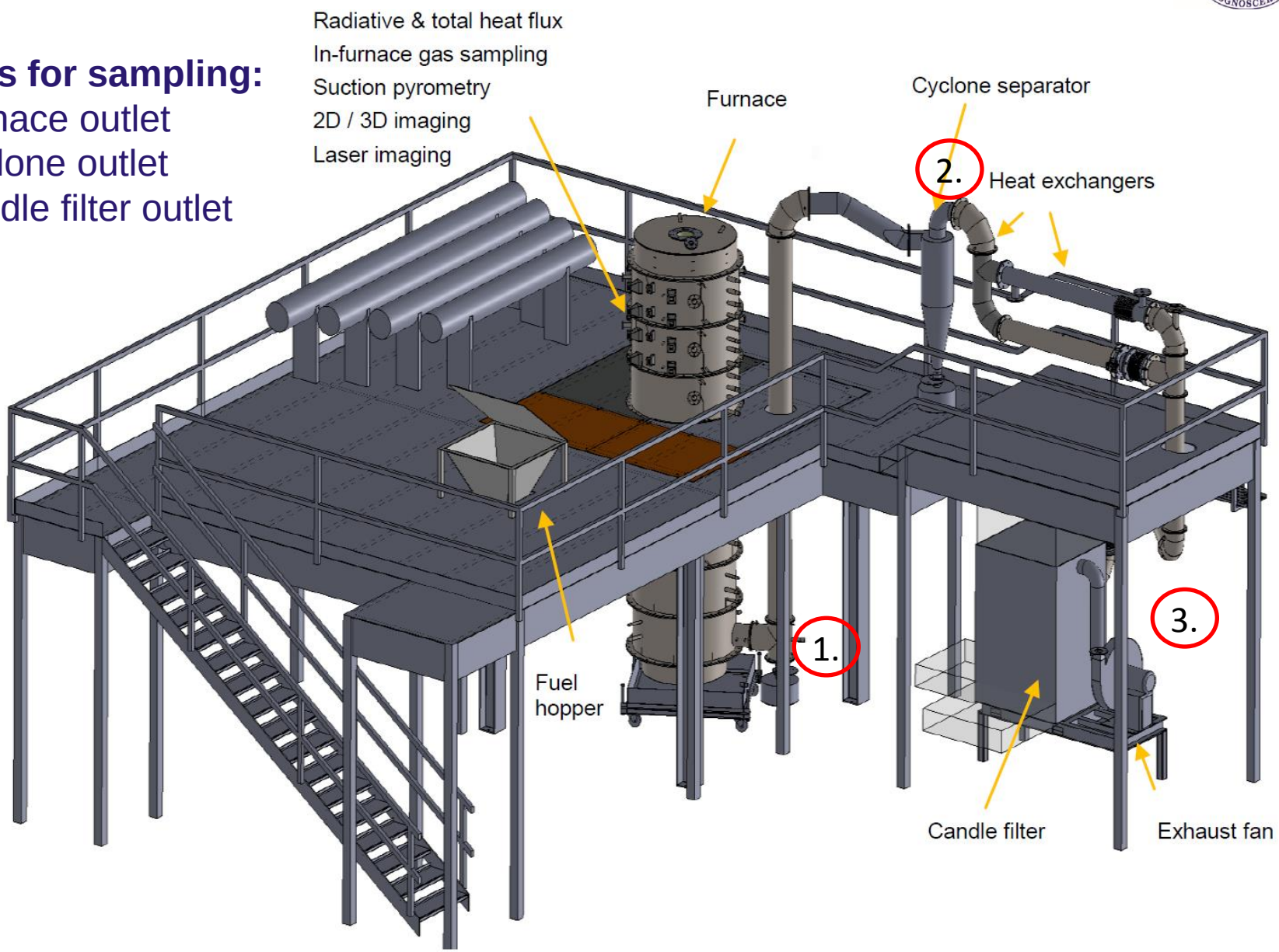

Summary

- The ICP-OES can identify the emissions spectra (spectral lines) of various non-volatile metals and major, minor, trace and ultra-trace volatile elements,
  which are toxic, easily vaporised, cause operational issues (slagging fouling), etc.
- Quantification of the levels of elements in the gas-phase will enable element partitioning studies when combined with detailed ash analysis

Element		Spectral Line/Wavelength (nm)	Line type	Possible Interference(s)
K	(1)	404.721, 766.491, 761.900	I	W & Fe II
Na	(2)	588.995 & 589.592	I & I	Sc II & Mo I
Ca	(4)	315.887, 393.366, 396.847 & 422.673	II, II, II & I	Co I, W I, V I and Al II
Mg	(2)	279.553 & 285.213	II & I	Yb
Al	(2)	309.271 & 396.152	I & I	S, O
Fe	(2)	259.941 & 373.486	I & I	Fe II
Si	(2)	251.612 & 288.158 (plus others)		

The University Of Sheffield.

Thank you!

Contact:
Janos Szuhanszki – J.Szuhanszki@sheffield.ac.uk
Karen Finney – K.N.Finney@sheffield.ac.uk

PI: Prof Mohamed Pourkashanian – M.Pourkashanian@sheffield.ac.uk

THE 1ST STUDENT EXPERIENCE SURVEY 2014-15